Cooling Towers LLC.

"The One Source for all of Your Cooling Tower Needs"

Customer: _____ Location _____

Contact: _____ Address: _____

Phone/Fax: _____ Inspector: _____

Email: _____ Date: _____

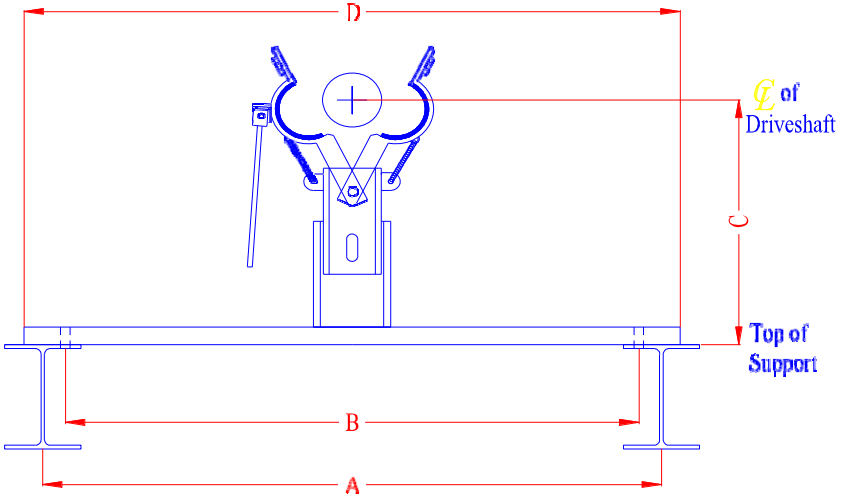

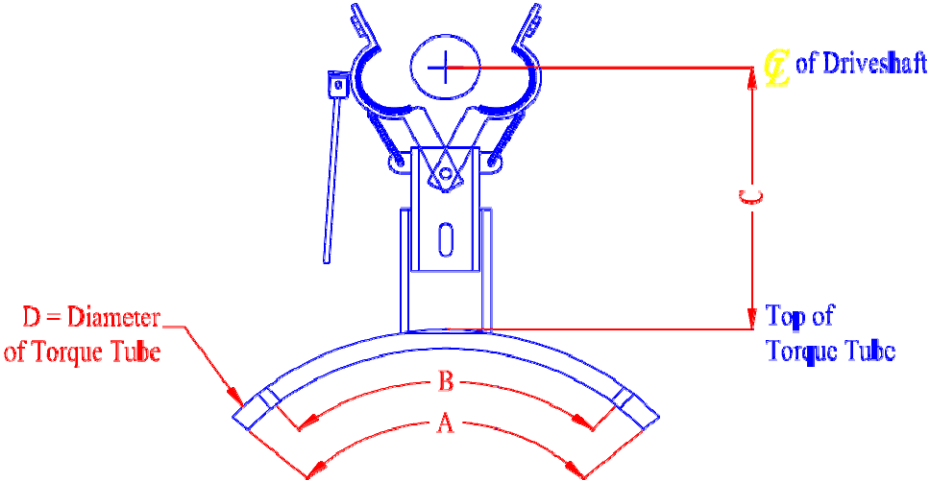

Plant/Unit	Cooling Tower	Cell	Unitized Support				Torque Tube Support				Driveshaft Barrel	
			A	B	C	D	A	B	C	D	Outer Diameter	Length
			New Driveshaft Required? .....Fill In Information Below									
			Motor		Gearbox			Fan			Driveshaft	Notes
			HP	Frame	Manf.	Model	Ratio	Manf.	Dia.	# Blades	DBSE	